AXENT GRACE

WASHBASIN L50.0052.0011.0

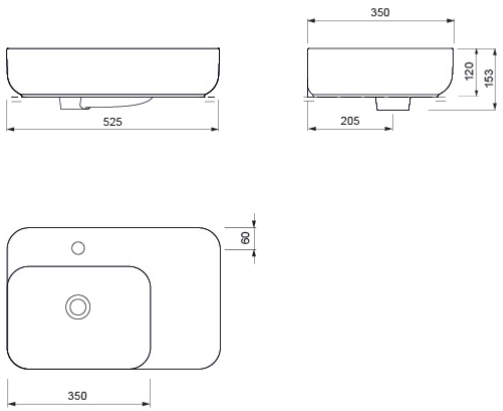

PRODUCT DETAILS

Designer	Matteo Thun & Antonio Rodriguez
Material	Ceramic with Easy Clean surface
Colour	White
Version	with overflow with tap fitting
Installation	Wall-hung
Dimensions / weight	525 x 350 x 153 mm / 11.5 kg
Overflow type	CL 15
Scope of delivery	incl. fixing material, Overflow cap chrome

FEATURES

- Square basin shape with shelf space right

FULL DESCRIPTION

AXENT GRACE WASHBASIN, designed by Matteo Thun & Antonio Rodriguez, with overflow, with tap fitting, Wall-hung, Ceramic with Easy Clean surface, Square basin shape with shelf space right
Dimension (LxWxH): 525x350x153mm, White, Order No. L50.0052.0011.0

AXENT International AG
info@axentbath.ch
www.axentbath.ch

All drawings contain the necessary measurements which are subject to standard tolerances. They are stated in mm and are non-binding. Exact measurements, in particular for customised installation scenarios, can only be taken from the finished ceramic piece.