AXENT GRACE

SEMI-RECESSED WASHBASIN L50.0359.0011.0

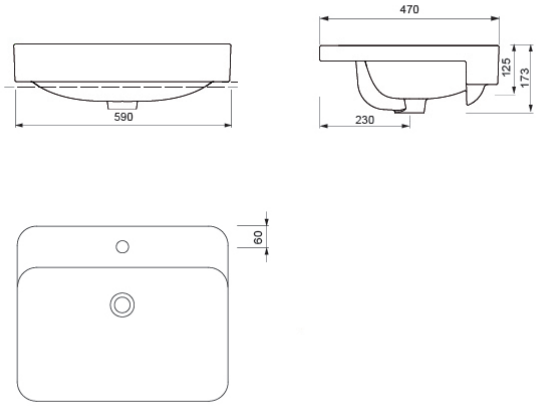

PRODUCT DETAILS

Designer	Matteo Thun & Antonio Rodriguez
Material	Ceramic with Easy Clean surface
Colour	White
Version	with overflow with tap fitting
Installation	Semi-recessed
Dimensions / weight	590 x 465 x 173 mm / 12.0 kg
Overflow type	CL 15
Scope of delivery	incl. fixing material, Overflow cap chrome

FEATURES

- Rectangular basin shape

FULL DESCRIPTION

AXENT GRACE SEMI-RECESSED WASHBASIN, designed by Matteo Thun & Antonio Rodriguez, with overflow, with tap fitting, Semi-recessed, Ceramic with Easy Clean surface, Rectangular basin shape
Dimension (LxWxH): 590x465x173mm, White, Order No. L50.0359.0011.0

AXENT International AG
info@axentbath.ch
www.axentbath.ch

All drawings contain the necessary measurements which are subject to standard tolerances. They are stated in mm and are non-binding. Exact measurements, in particular for customised installation scenarios, can only be taken from the finished ceramic piece.